ABSOLUTE Digimatic Indicator ID-SX2 SERIES 543

- Cost-effective oriented design
  ID-SX2 indicators come with the minimum of functionality for ease of use. There is a choice of models in the lineup allowing selection of 0.01 mm, 0.001 mm or inch-based measurement resolutions.
- IP53 dust/water protection level
  The models listed below also provide IP53 dust/water protection level specifications:
  543-794(B)-10, **543-795(B)-10** and **543-796(B)-10**
- The ABS (absolute) scale restores the last origin position* automatically when the indicator is turned on, and realizes high reliability by eliminating over-speed errors.
- Equipped with a data output port that enables incorporation into measurement networking and statistical process control systems. (Refer to page A-3)

* Refer to "Origin Setting of Digimatic Indicators" on page F-25.

543-781-10
ID-S1012X2

543-790-10
ID-S112X2

543-794-10
ID-S112PX2

SPECIFICATIONS

Metric

ISO/JIS Type | ASME/ANSI/AGD type

Order No.	Range (mm)	Resolution (mm)	Maximum permissible error*1 (mm) MPE$_E$*2	Hysteresis MPE$_H$	Repeatability MPE$_R$	Measuring force MPL (N)	Back type	Battery life*3	Net mass (g)	Dust/Water protection level*4
543-790-10	12.7	0.001	0.003	0.002	0.002	1.5 or less	With lug	Approx. 18,000 hours (Continuous use) Approx. 5 years (Normal use)	150	IP42
543-790B-10							Flat		140	
543-794-10						2.5 or less	With lug		155	IP53
543-794B-10							Flat		155	
543-781-10		0.01	0.02	0.02	0.01	1.5 or less	With lug	Approx. 20,000 hours (Continuous use) Approx. 5 years (Normal use)	150	IP42
543-781B-10							Flat		140	

Inch/Metric

Order No.	Range	Resolution	Maximum permissible error*1 MPE$_E$*2	Hysteresis MPE$_H$	Repeatability MPE$_R$	Measuring force MPL (N)	Back type	Battery life*3	Net mass (g)	Dust/Water protection level*4
543-791-10	0.5 in/ 12.7 mm	0.00005 in /0.001 mm	±0.0001 in /0.003 mm	0.0001 in /0.002 mm	0.0001 in /0.002 mm	1.5 or less	With lug	Approx. 18,000 hours (Continuous use) Approx. 5 years (Normal use)	150	IP42
543-791B-10							Flat		140	
543-792-10							With lug		165	
543-792B-10							Flat		140	
543-793-10		0.0001 in /0.001 mm					With lug		165	
543-793B-10							Flat		140	
543-795-10		0.00005 in /0.001 mm				2.5 or less	With lug		155	IP53
543-795B-10							Flat		155	
543-796-10							With lug		155	
543-796B-10							Flat		155	
543-782-10		0.0005 in /0.01 mm	±0.0010 in /0.02 mm	0.0010 in /0.02 mm	0.0005 in /0.01 mm	1.5 or less	With lug	Approx. 20,000 hours (Continuous use) Approx. 5 years (Normal use)	150	IP42
543-782B-10							Flat		140	
543-783-10							With lug		165	
543-783B-10							Flat		140	

*1 These values apply at 20 °C.
*2 Error of indication for the total measuring range
*3 The battery life varies, depending on the number of times a Digimatic indicator is used as well as the way it is used. The values listed above are approximations.
*4 This is only valid when the data socket cover is in place. Does not apply if the cover is removed, a lifting accessory is attached, or a connecting cable is attached.
Note: Regarding origin setting, refer to "Origin Setting of Digimatic Indicators" on page F-25.

MeasurLink® ENABLED Data Management Software by Mitutoyo

ABSOLUTE™

IP53

Applicable models:
See **SPECIFICATIONS**

Technical Data

- Display: 6-digit LCD, sign
- Usable orientation: All
- Scale type: ABSOLUTE electrostatic linear encoder
- Battery: SR44 (1 pc.), **938882** for initial operational checks (standard accessory)
- Maximum response speed: Unlimited (except for scanning measurement)

Functions

- Origin set (Zero-setting)
- Measuring direction switching
- Data output
- Low battery voltage alarm display
- Error alarm display

Optional Accessories

Lifting lever | Lifting knob

- Lifting
  Lifting lever **21EZA198**
  Lifting knob **21EZA105**
  Lifting cable **21JZA295**
- SPC Cable:
  905338 (1 m)
  905409 (2 m)
- USB Input Tool Direct (2 m): **06AFM380F**

Note: Please separately purchase **USB-ITPAK** since there is no data output switch on the measurement instrument.

- Input Tool Series
  IT-020U (USB Keyboard Signal Conversion Type): **264-020**
  IT-007R (RS-232C Communication Conversion Type): **264-007**
- Connecting Cables for **U-WAVE-T** (160 mm): **02AZD790F**
  For foot switch: **02AZE140F**
- Digimatic Mini-Processor **DP-1VA LOGGER**: **264-505**
- Contact points for Mitutoyo's digimatic indicators (Refer to pages F-57 to F-60 for details.)
- Interchangeable backs for SERIES 2 models (Refer to page F-61 for details.)
- Measuring stands (Refer to pages F-84 to F-91 for details.)

IP53 dust/water protection level*

Level 5: Dust protection
While complete protection against intrusion of dust is not provided, protection is adequate to prevent dust intrusion in amounts that would inhibit the prescribed operations and safety of the electronic equipment.

Level 3: Protection against spraying water
The product suffers no harmful effects when subjected to water sprayed at an angle of up to 60° on both sides.

For details on the dust/water protection level test conditions, refer to IEC 60529: 2001 and JIS C 0920: 2003.

* IP code is the degree of protection against the intrusion of solid foreign objects and water.
Mitutoyo offers a lineup of coolant proof, **ID-N/B** indicators that have excellent resistance to oil, water and dust and so are suitable for use in environments that include splashing cutting fluid. (Refer to page F-8 for details.)

F

Mitutoyo reserves the right to change any or all aspects of any product specification, including prices, designs and service content, without notice.

DIMENSIONS

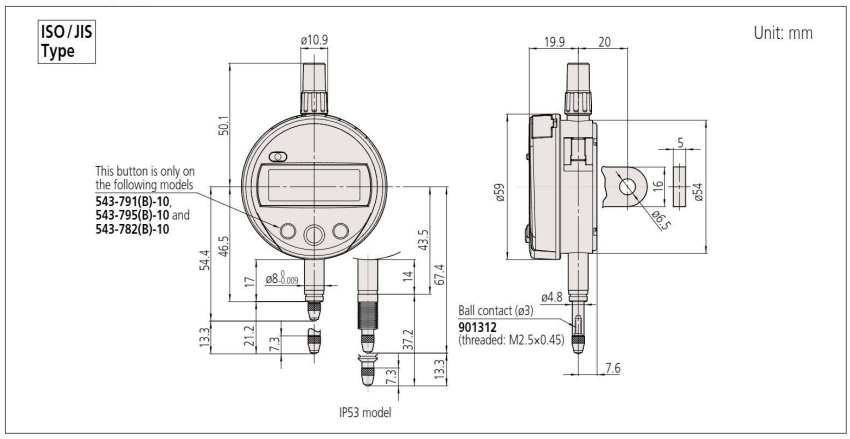

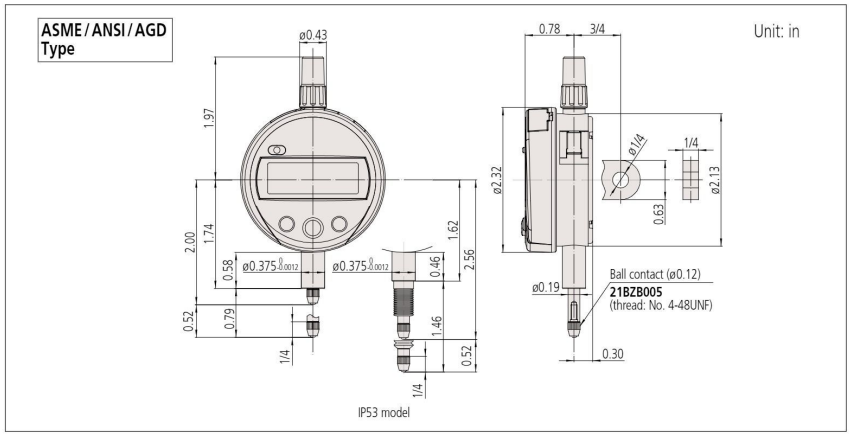

F

MeasurLink® ENABLED
Data Management Software by Mitutoyo

ABSOLUTE™

PROPRIETARY INSPECTION CERTIFICATE

ABSOLUTE Digimatic Indicator ID-CNX SERIES 543 — Standard Type

- Supports bidirectional communication between the **ID-C** and the computer, enabling data output to a computer and setting of various functions of **ID-C** from a computer.
- The ABS (absolute) scale restores the last origin position* automatically when the indicator is turned on, and realizes high reliability by eliminating over-speed errors.
- Tolerance judgment can be performed by setting upper and lower tolerance limits. The judgment result (GO/NO-GO) can be displayed in full-size characters.
- An analog bar indicator has been integrated to make upper/lower limit and turnover point reading more comfortable.
- Battery life of approx. 2.5 years under normal use has been achieved with only one battery.
- Equipped with a data output port that enables incorporation into measurement networking and statistical process control systems. (Refer to page A-3)

* Refer to "Origin Setting of Digimatic Indicators" on page F-25.

Measuring range 12.7 mm
543-700B

Low measuring force model
543-705B

Measuring range 25.4 mm
543-720B

Measuring range 50.8 mm
543-730B

• Large LCD

A large LCD with an analog bar graph to improve the readability of measurement values.

• Three large buttons

The ease of use has been greatly enhanced thanks to these three large buttons. The user can freely set any frequently used function to the buttons.

- Power switch
- Data output (when connected to an external device)
- Data hold (when no external device is connected)

Switches between the ABS (preset) and INC (zeroset) measurement modes

- Parameter setting mode
  Count direction switching, tolerance judgment setting, resolution switching, scale factor setting, and function lock setting
- inch/mm conversion (inch/mm type)

• 330° rotary display

The display can be rotated 330°, allowing use at a position where you can easily read the measurement value.

• Calibration schedule warning

An icon is displayed on the LCD to notify the user of the set calibration schedule. This function facilitates the proper precision management of the measuring instrument.

The calibration schedule warning icon starts blinking at a set time (e.g. 1 week before the calibration date) before the limit. If the limit is exceeded, the entire screen starts blinking to notify the user.

Technical Data

- Display: 7-digit LCD, sign, and analog bar
- Battery: CR2032 (1 pc.) for initial operational checks (standard accessory)
- Battery life: Approx. 2,700 hours of continuous use. Approx. 2.5 years under normal use.

Note: Depends on use of the indicator. The above values are reference values.

- Maximum response speed: Unlimited (except for scanning measurement)

Functions

- Peak detection (MAX/MIN)
- Runout range measurement (MAX - MIN)
- Zero-setting (INC system)
- Presetting (ABS system)
- Measuring direction switching
- Tolerance judgment
- Resolution switching (For 0.0005 mm or 0.00002 inch resolution type)
- Simple calculation: f(x) =Ax
- Function Lock
- Calibration schedule warning
- Auto power ON/OFF
- Data output
- Display value holding (when no external device is connected)
- 330° rotary display
- Low battery/voltage alarm display
- Error alarm display

Optional Accessories

- Lifting
  Lifting lever:
  21EZA198 (12.7 mm/0.5 inch type)
  Lifting cable: **21JZA295**
  (stroke 12.7 mm: 12.7 mm/0.5 inch type)
  Lifting knob:
  21EZA105 (12.7 mm/0.5 inch type)*1
  21EZA197 (25.4 mm/1 inch type)
  21EZA200 (50.8 mm/2 inch type)
  Lifting lever: **21EAA426** (for measuring range: 25.4 and 50.8 mm)
  (supplied with 25.4 mm and 50.8 mm models as standard.)

*1 Not available for low measuring force models.

- Auxiliary spindle spring:
  02ACA571 (25.4 mm/1 inch type)*2
  02ACA773 (50.8 mm/2 inch type)*2

*2 Required when orienting the indicator upside down.

- SPC Cable:
  06AGL011 (1 m)
  06AGL021 (2 m)
- USB Input Tool Direct (2 m): **06AGQ001F**
- Input Tool Series
  IT-020U (USB Keyboard Signal Conversion Type): **264-020**
  IT-007R (RS-232C Communication Conversion Type): **264-007**
- Connecting Cables for **U-WAVE-T** (160 mm): **02AZG011**
  For foot switch: **02AZG021**
- Connecting unit for **U-WAVE-TM/TMB: 02AZF700** (12.7 mm/0.5 inch type)
- Digimatic Mini-Processor **DP-1VA LOGGER**: **264-505**
- Contact points for Mitutoyo's digimatic indicators (Refer to pages F-57 to F-60 for details.)
- Interchangeable backs for SERIES 2 models (Refer to page F-61 for details.)
- Measuring stands (Refer to pages F-84 to F-91 for details.)

F

Mitutoyo reserves the right to change any or all aspects of any product specification, including prices, designs and service content, without notice.

Spindle orientation for measurement

- Standard models with measuring range 12.7 mm: Usable in all orientations.
- Models with measuring range 25.4 or 50.8 mm: Usable between the contact point pointing downward and spindle in horizontal orientation. To use the contact point pointing upward, the auxiliary spindle spring (optional) is required.
- Low measuring force model: See "Setting measuring force on low measuring force models" below.

Setting measuring force on low measuring force models

The measuring force of models with low measuring force can be set by combining standard accessory springs and weights.

• 543-715(B)/716(B)/717(B)

Spindle orientation	Spring	Weight (approximately 0.1 N)	Maximum measuring force (N)
Pointing vertically downward	Yes	Yes	0.5 or less
	Yes	No	0.4 or less
	No	Yes	0.3 or less
	No	No	0.2 or less
Horizontal	Yes	No	0.3 or less

Note: Operation using configurations other than shown above is not guaranteed.

• 543-705(B)/706(B)/707(B)

Spindle orientation	Spring	Weight (approximately 0.1 N)	Maximum measuring force (N)
Pointing vertically downward	Yes	Yes	0.7 or less
	Yes	No	0.6 or less
	No	Yes	0.4 or less
	No	No	Not guaranteed

Note: Operation using configurations other than shown above is not guaranteed.

SPECIFICATIONS

Metric

ISO/JIS type ASME/ANSI/AGD type

Order No. w/lug	Order No. Flat back	Range (mm)	Resolution (mm)	Maximum permissible error MPE*1 (mm) MPE$_E$*3	Hysteresis MPE$_H$	Repeatability MPE$_R$	Measuring force MPL (N)	Net mass (g) w/lug	Net mass (g) Flat back
543-700	**543-700B**	12.7	0.0005/ 0.001/0.01 (selectable)	0.003	0.002	0.002	1.5 or less	175	165
543-705*2	**543-705B***2						0.4 to 0.7	170	160
—	**543-720B**	25.4					1.8 or less	—	195
—	**543-730B**	50.8		0.005			2.3 or less	—	260
543-710	**543-710B**	12.7	0.01	0.02	0.02	0.01	0.9 or less	170	160
543-715*2	**543-715B***2						0.2 to 0.5	165	155
—	**543-725B**	25.4					1.8 or less	—	190
—	**543-735B**	50.8		0.04			2.3 or less	—	245

*1 These values apply at 20 °C.
*2 Low measuring force
*3 Error of indication for the total measuring range

Inch/Metric

Order No. w/lug	Order No. Flat back	Range	Resolution	Maximum permissible error MPE*1 MPE$_E$*3	Hysteresis MPE$_H$	Repeatability MPE$_R$	Measuring force MPL (N)	Net mass (g) w/lug	Net mass (g) Flat back
543-701	**543-701B**	0.5 in/ 12.7 mm	0.00002/ 0.00005/ 0.0001/ 0.0005 in 0.0005/ 0.001/ 0.01 mm (selectable)	±0.00012 in /0.003 mm	0.00008 in /0.002 mm	0.00008 in /0.002 mm	1.5 or less	175	165
543-702	**543-702B**						1.5 or less	195	165
543-706*2	**543-706B***2						0.4 to 0.7	170	160
543-707*2	**543-707B***2						0.4 to 0.7	190	160
—	**543-721B**	1 in/ 25.4 mm					1.8 or less	—	195
—	**543-722B**						1.8 or less	—	195
—	**543-731B**	2 in/ 50.8 mm		±0.0002 in /0.005 mm			2.3 or less	—	260
—	**543-732B**						2.3 or less	—	260
543-711	**543-711B**	0.5 in/ 12.7 mm	0.0005 in/ 0.01 mm	±0.001 in /0.02 mm	0.001 in /0.02 mm	0.0005 in /0.01 mm	0.9 or less	170	160
543-712	**543-712B**						0.9 or less	190	160
543-716*2	**543-716B***2						0.2 to 0.5	165	155
543-717*2	**543-717B***2						0.2 to 0.5	185	155
—	**543-726B**	1 in/ 25.4 mm					1.8 or less	—	190
—	**543-727B**						1.8 or less	—	190
—	**543-736B**	2 in/ 50.8 mm		±0.0015 in /0.04 mm			2.3 or less	—	245
—	**543-737B**						2.3 or less	—	245

*1 These values apply at 20 °C.
*2 Low measuring force
*3 Error of indication for the total measuring range

DIMENSIONS

12.7 mm range models

ISO/JIS Type Unit: mm

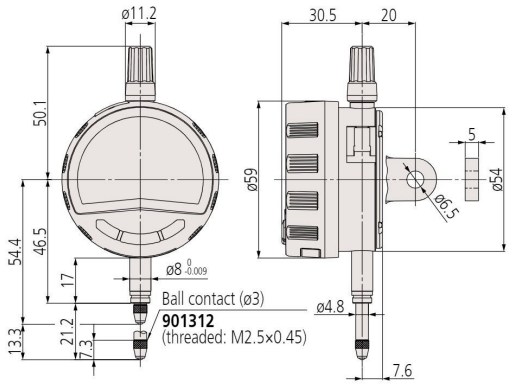

ASME/ANSI/AGD Type Unit: in

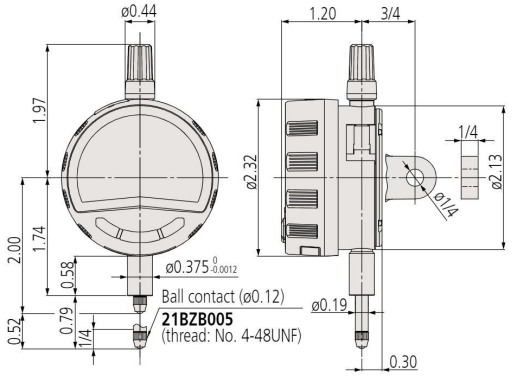

Note: Products with an Order No. suffixed "**B**" have a plain back, and other models have a center-lug back. Refer to page F-61 for details of the backs.

F

DIMENSIONS

25.4 mm range models

Unit: mm

Unit: in

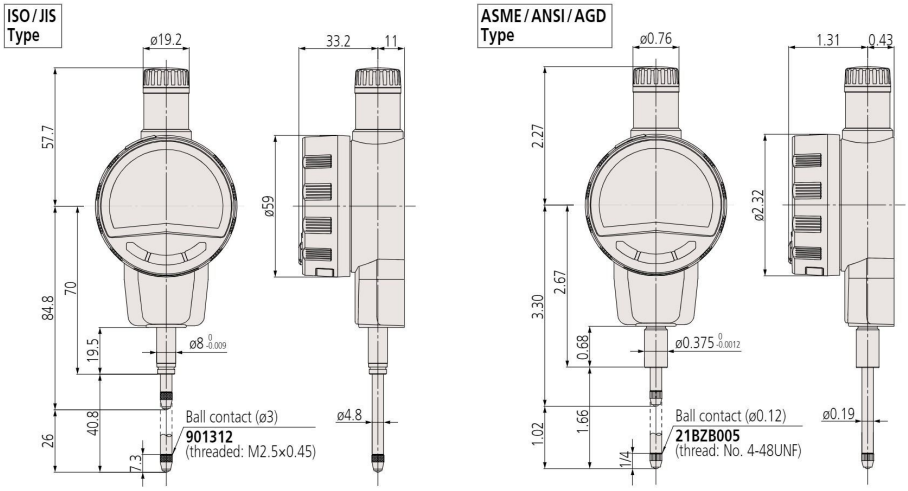

50.8 mm range models

Unit: mm

Unit: in

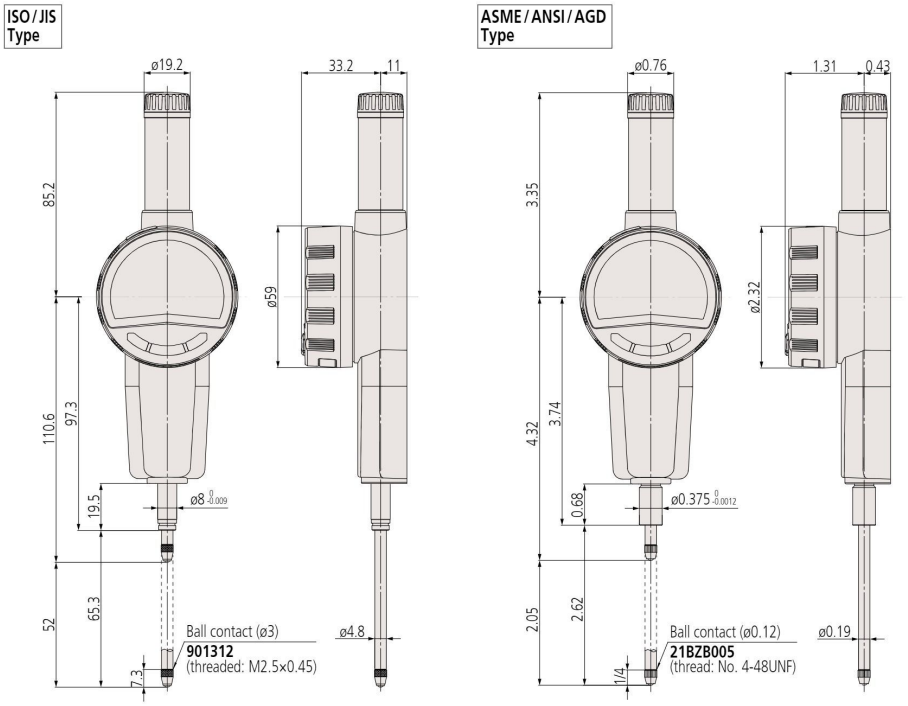

Note: Products with an Order No. suffixed "**B**" have a plain back, and other models have a center-lug back. Refer to page F-61 for details of the backs.

F

Mitutoyo reserves the right to change any or all aspects of any product specification, including prices, designs and service content, without notice.

MeasurLink® ENABLED
Data Management Software by Mitutoyo

ABSOLUTE™

IP66

Dust- and Water-Protected
TÜVRheinland CERTIFIED
www.tuv.com ID 0000007161

Applicable models:
543-57X

Dust- and Water-Protected
TÜVRheinland CERTIFIED
www.tuv.com ID 0000007162

Applicable models:
543-58X

Functions

- Zero-setting (INC system)
- Presetting (ABS system)
- Measuring direction switching
- Tolerance judgment
- LCD readout reversal
- Resolution switching
  (For 0.001 mm or 0.00005 in resolution type)
- Data output
- Display value holding
  (when no external device is connected)
- Low battery voltage alarm display
- Error alarm display

ABSOLUTE Digimatic Indicator ID-N/B SERIES 543 — with Dust/Water Protection Conforming to IP66

- The ABS (absolute) scale restores the last origin position* automatically when the indicator is turned on, and realizes high reliability by eliminating over-speed errors.
- Rated to IP66: can be used satisfactorily even in adverse environments where the indicator is subject to splashing by cutting fluid or coolant.
- Slim body design (body width: only 35 mm) is advantageous in multipoint measurement situations where space is restricted. The LCD readout can also be rotated 180° to allow reading from the most convenient direction.

* Refer to "Origin Setting of Digimatic Indicators" on page F-25.

- Succeeded in digitalization of the Back Plunger type widely used for dial indicators for **ID-B**. A 5 mm-stroke plunger with a higher degree of accuracy has been implemented by adopting a direct reading scale for plunger displacement.
- Tolerance judgment can be performed by setting upper and lower tolerance limits. The judgment result (GO/NO-GO) can be displayed in full-size characters.
- Equipped with a data output port that enables incorporation into measurement networking and statistical process control systems. (Refer to page A-3)

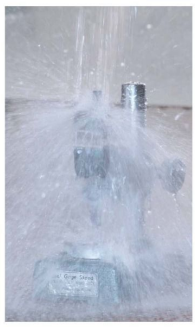

Rated to IP66 water- and dust-proofing standard and oil resistance improved.

Body width 35 mm

LCD readout reversal function

SPECIFICATIONS

ISO/JIS type ASME/ANSI/AGD type

Metric

Order No.	Range (mm)	Resolution (mm)	Maximum permissible error (mm)			Measuring force MPL (N)	Remarks
			MPE$_E$*	Hysteresis MPE$_H$	Repeatability MPE$_R$		
543-570	12.7	0.01	0.02	0.02	0.01	2.5 or less	Slim type
543-580	5.0					2.0 or less	Back Plunger type
543-575	12.7	0.01/0.001 (selectable)	0.01/0.003	0.002	0.002	2.5 or less	Slim type
543-585	5.0					2.0 or less	Back Plunger type

Inch/Metric

Order No.	Range (in)	Resolution	Maximum permissible error			Measuring force MPL (N)	Remarks
			MPE$_E$*	Hysteresis MPE$_H$	Repeatability MPE$_R$		
543-571	0.5	0.0005 in/0.01 mm	±0.001 in/0.02 mm	0.001 in/0.02 mm	0.0005 in/0.01 mm	2.5 or less	Slim type
543-581	0.2					2.0 or less	Back Plunger type
543-576	0.5	0.00005/0.0005 in 0.001/0.01 mm (selectable)	±0.0001 in/0.003 mm	0.0001 in/0.002 mm	0.0001 in/0.002 mm	2.5 or less	Slim type
543-586	0.2					2.0 or less	Back Plunger type

* Error of indication for the total measuring range
Note: One silver oxide button cell (SR44) for monitor included

Mitutoyo reserves the right to change any or all aspects of any product specification, including prices, designs and service content, without notice.

Mitutoyo

Typical applications

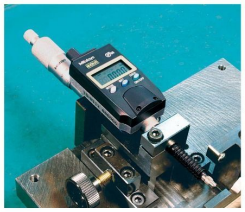

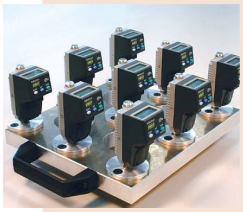
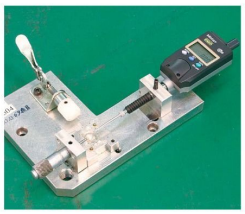
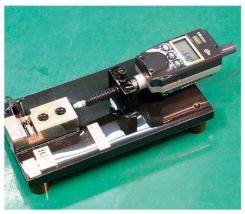
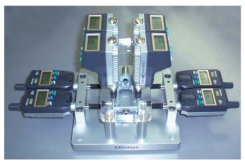

DIMENSIONS

Slim Type ID-N

Unit: mm

ISO/JIS Type

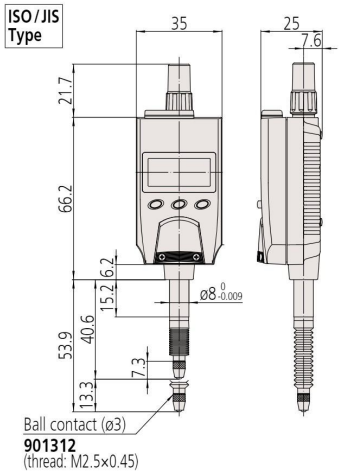

Unit: in

ASME/ANSI/AGD Type

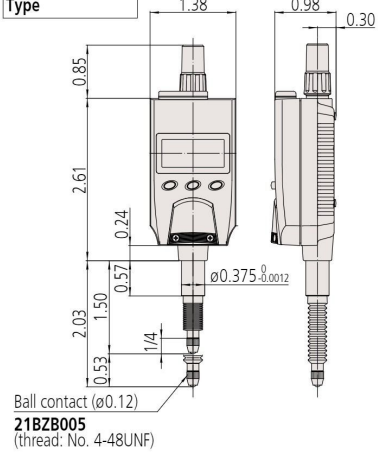

Back plunger Type ID-B

ISO/JIS Type

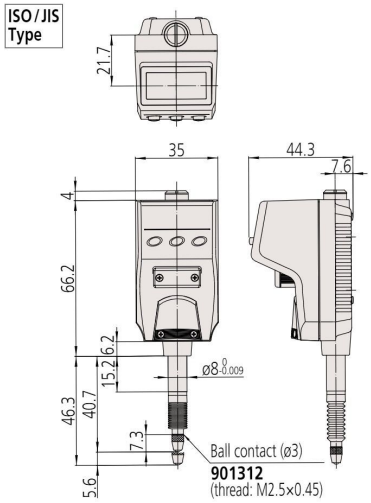

ASME/ANSI/AGD Type

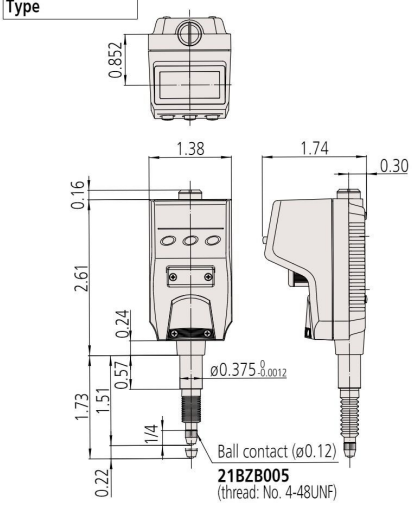

Optional Accessories

- Lug
  21EZA145 (ISO/JIS type)
  21EZA146 (ASME/ANSI/AGD type)
- Contact points for Mitutoyo's digimatic indicators. (Refer to pages F-57 to F-60 for details.)
- Lifting knob (only for **ID-N**)
  21EZA105 (ISO/JIS type)
  21EZA150 (ASME/ANSI/AGD type)
  Spindle can be manually lifted. Remove the spindle cap for **ID-N** and attach the lifting knob to the spindle. Note that water resistance is not maintained in this configuration.

Typical application using the lifting knob

- Arm for **ID-B** (made-to-order)
- Rubber boot
  For oil resistance (NBR) **21EAA423** (for **ID-N**)
  21AAB562 (for **ID-B**)
  For durability (silicone) **238774** (for **ID-N**)
  21EAA212 (for **ID-B**)
- SPC cable:
  21EAA194 (1 m)
  21EAA190 (2 m)

- USB Input Tool Direct (2 m): **06AFM380G**
- Input Tool Series
  IT-020U (USB Keyboard Signal Conversion Type): **264-020**
  IT-007R (RS-232C Communication Conversion Type): **264-007**
- Connecting Cables for **U-WAVE-T** (160 mm): **02AZD790G**
  For foot switch: **02AZE140G**
- Digimatic Mini-Processor **DP-1VA LOGGER**: **264-505**
- Bifurcated connecting cable with zero-setting terminal:
  21EAA210 (1 m)
  21EAA211 (2 m)
  Two of the wires inside the cable are separated for zero setting without touching the SET switch on the main body. Use these wires in combination with commercially available switches. Zero setting is performed by briefly connecting these two wires together (less than a second), and ABS preset & recall by connecting for a second or more.

F

Mitutoyo reserves the right to change any or all aspects of any product specification, including prices, designs and service content, without notice.

MeasurLink® ENABLED
Data Management Software by Mitutoyo

ABSOLUTE™

PROPRIETARY INSPECTION CERTIFICATE

ABSOLUTE Digimatic Indicator ID-C SERIES 543 — Peak-Value Hold Type

- Run-out/MAX-MIN Hold function enables GO/NG judgment*1 for peak or difference values.
- Five buttons, status icons, and clear button indications allow for easy operation of a wide variety of functions.
- Wide LCD and new analog bar graph are now standard on all models.
- The ABS (absolute) scale restores the last origin position*2 automatically when the indicator is turned on, and realizes high reliability by eliminating over-speed errors.
- By using the parameter setup kit (optional) and the dedicated software, the functions and the parameters can be configured using a computer.
- Equipped with a data output port that enables incorporation into measurement networking and statistical process control systems. (Refer to page A-3)

*1 Tolerance judgment results cannot be output.
*2 Refer to "Origin Setting of Digimatic Indicators" on page F-25.

543-300-10/543-300B-10

Functions

- Peak detection (MAX/MIN)
- Runout (MAX - MIN) Hold

Note: Peak detection
1) Sampling rate: 50 readings/s
2) Capturing speed: 50 μm/s (max.)

- Zeroset (INC system)
- Preset function (ABS system)
- Measuring direction switching
- Tolerance judgment (3 pairs of ABS, INC memory function)
- Resolution selection
- Simple calculation f(x) =Ax
- Analog bar resolution selection
- Key lock
- in/mm conversion (inch/mm type)
- Display hold (when no external device is connected)
- Data output
- External PC setting input
- Display rotation (330°)
- Low battery voltage alarm display
- Error alarm display

Optional Accessories

- Lifting
  Lifting lever **21EZA198**
  Lifting knob **21EZA105**
- SPC Cable:
  905338 (1 m)
  905409 (2 m)
- USB Input Tool Direct (2 m) : **06AFM380F**
- Input Tool Series
  IT-020U (USB Keyboard Signal Conversion Type): **264-020**
  IT-007R (RS-232C Communication Conversion Type): **264-007**
- Connecting Cables for **U-WAVE-T** (160 mm): **02AZD790F**
  For foot switch: **02AZE140F**
- Digimatic Mini-Processor **DP-1VA LOGGER**: **264-505**
- Parameter setup kit: **21EZA313**

Note: Parameter setting software (can be downloaded for free from the Mitutoyo website) is also required.

Parameter setup kit

Parameter setting software

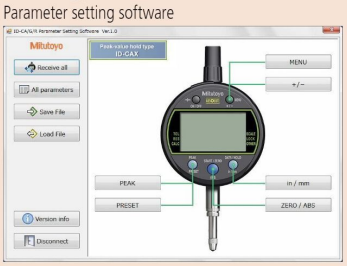

SPECIFICATIONS

ISO/JIS type ASME/ANSI/AGD type

Metric

Order No. (w/lug, flat back)	Range (mm)	Resolution (mm)	Maximum permissible error (mm)			Measuring force MPL (N)	Power supply	Battery life (normal use)*2	Net mass (g)
			MPE_E*1	Hysteresis MPE_H	Repeatability MPE_R				
543-300-10	12.7	0.001/ 0.01 (selectable)	0.003	0.002	0.002	1.5 or less	CR2032×1 pc.	Approx. 1 year	180
543-300B-10*3									170

Inch/Metric

Order No. (w/lug, flat back)	Range	Resolution	Maximum permissible error			Measuring force MPL (N)	Power supply	Battery life (normal use)*2	Net mass (g)
			MPE_E*1	Hysteresis MPE_H	Repeatability MPE_R				
543-301-10	0.5 in/ 12.7 mm	0.00005/ 0.0001/ 0.0005 in, 0.001/0.01 mm (selectable)	±0.00010 in /0.003 mm	0.00010 in /0.002 mm	0.00010 in /0.002 mm	1.5 or less	CR2032×1 pc.	Approx. 1 year	180
543-301B-10*3									170
543-302-10									195
543-302B-10*3									170

*1 Error of indication for the total measuring range
*2 Applies only if not connected to a data processor. Battery life depends on use of the indicator. Use the above value as a guide only.
*3 Flat back

F

Mitutoyo reserves the right to change any or all aspects of any product specification, including prices, designs and service content, without notice.

Mitutoyo

DIMENSIONS

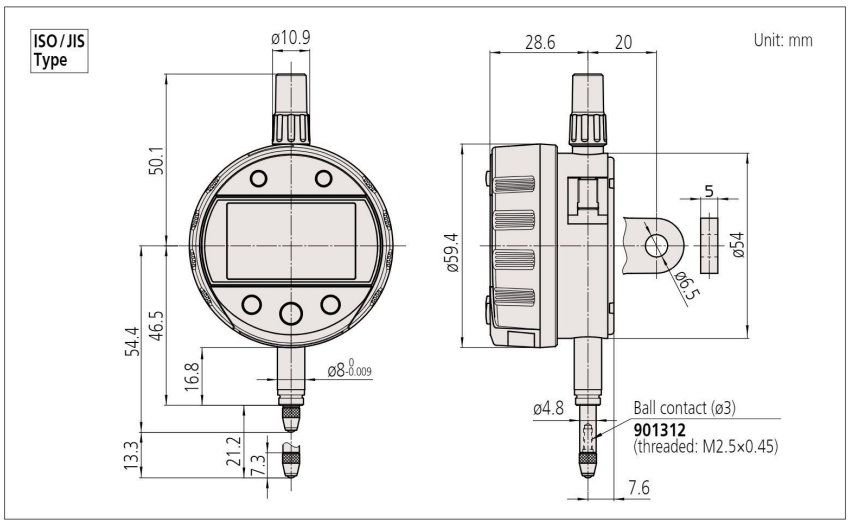

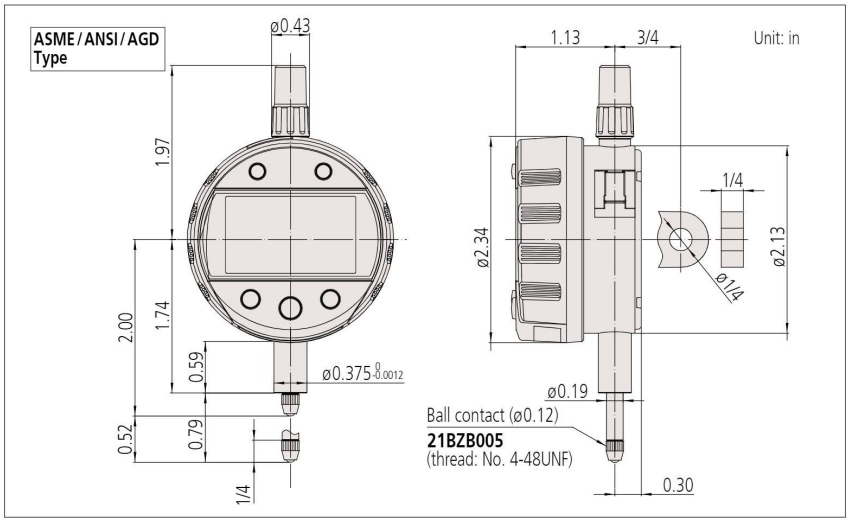

F

Mitutoyo reserves the right to change any or all aspects of any product specification, including prices, designs and service content, without notice.

MeasurLink® ENABLED
Data Management Software by Mitutoyo

ABSOLUTE™

PROPRIETARY INSPECTION CERTIFICATE

ABSOLUTE Digimatic Indicator ID-C SERIES 543 — Bore Gage Type

- Dedicated to inside measurement with minimum-value Hold and tolerance judgment functions*1.
  Use together with a Mitutoyo bore gage (refer to pages C-29 to C-46 for details).
- Five buttons, status icons, and clear button indications allow for easy operation of a wide variety of functions.
- Wide LCD and new analog bar graph are now standard on all models.
- Can store up to three sets of master reference values and tolerances, alleviating the need for multiple settings to master gages.
- The ABS (absolute) scale restores the last origin position*2 automatically when the indicator is turned on, and realizes high reliability by eliminating over-speed errors.
- By using the parameter setup kit (optional) and the dedicated software, the functions and the parameters can be configured using a computer.
- Equipped with a data output port that enables incorporation into measurement networking and statistical process control systems. (Refer to page A-3)

*1 Tolerance judgment results cannot be output.
*2 Refer to "Origin Setting of Digimatic Indicators" on page F-25.

543-310B-10

Typical application
The Bore Gage
is optional.

Functions

- Minimum value detection

Note: Peak detection
1) Sampling rate: 50 readings/s
2) Capturing speed: 50 μm/s (max.)

- Preset (3 Preset values can be stored)
- Tolerance judgment
  (3 sets of upper and lower limits can be stored)
- Resolution selection
- Analog bar resolution selection
- Key lock
- Display hold (when no external device is connected)
- Data saving/calling
  (when no external device is connected)
- Data output
- External PC setting input
- Display rotation (330°)
- Low battery voltage alarm display
- Error alarm display

Optional Accessories

- SPC Cable:
  905338 (1 m)
  905409 (2 m)
- USB Input Tool Direct (2 m): **06AFM380F**
- Input Tool Series
  IT-020U (USB Keyboard Signal Conversion Type):
  264-020
  IT-007R (RS-232C Communication Conversion Type):
  264-007
- Connecting Cables for **U-WAVE-T** (160 mm):
  02AZD790F
  For foot switch: **02AZE140F**
- Digimatic Mini-Processor **DP-1VA LOGGER**: **264-505**
- Parameter setup kit: **21EZA313**

Note: Parameter setting software (can be downloaded for free from the Mitutoyo website) is also required.

The ABSOLUTE Digimatic Bore Gage

ABSOLUTE Digimatic Bore Gages, which integrate the display with a bore gage measuring unit, are also available. Refer to pages C-47 and C-48 for details.

SPECIFICATIONS

ISO/JIS type ASME/ANSI/AGD type

Metric

Order No.	Range (mm)	Resolution (mm)	Maximum permissible error (mm)			Measuring force MPL (N)	Power supply	Battery life (normal use)*2	Net mass (g)
			MPE_E*1	Hysteresis MPE_H	Repeatability MPE_R				
543-310B-10	12.7	0.001/0.01 (selectable)	0.003	0.002	0.002	1.5 or less	CR2032 ×1 pc.	Approx. 1 year	170

Inch/Metric

Order No.	Range	Resolution	Maximum permissible error			Measuring force MPL (N)	Power supply	Battery life (normal use)*2	Net mass (g)
			MPE_E*1	Hysteresis MPE_H	Repeatability MPE_R				
543-311B-10	0.5 in/ 12.7 mm	0.00005/0.0001/ 0.0005 in, 0.001/0.01 mm (selectable)	±0.00010 in /0.003 mm	0.00010 in /0.002 mm	0.00010 in /0.002 mm	1.5 or less	CR2032 ×1 pc.	Approx. 1 year	170
543-312B-10									

*1 Error of indication for the total measuring range
*2 Applies only if not connected to a data processor. Battery life depends on use of the indicator. Use the above value as a guide only.
Note: Flat-back type only.

F

Mitutoyo reserves the right to change any or all aspects of any product specification, including prices, designs and service content, without notice.

Mitutoyo

DIMENSIONS

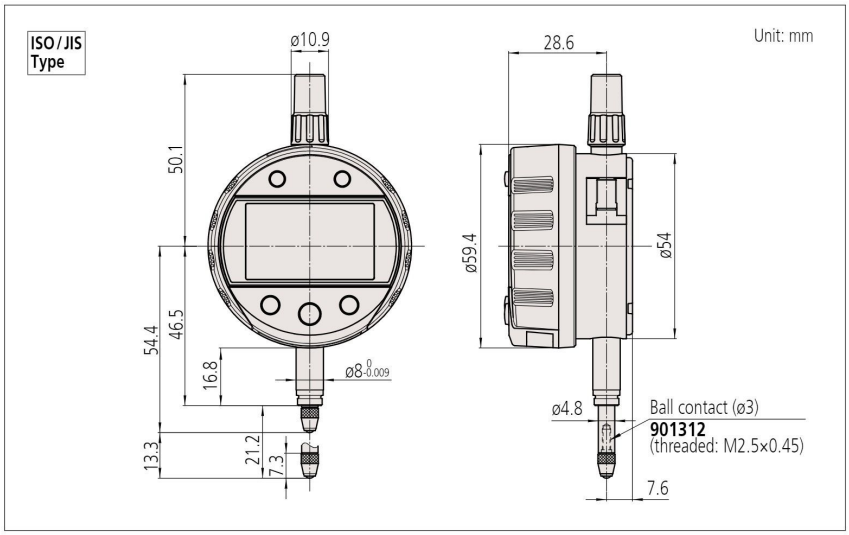

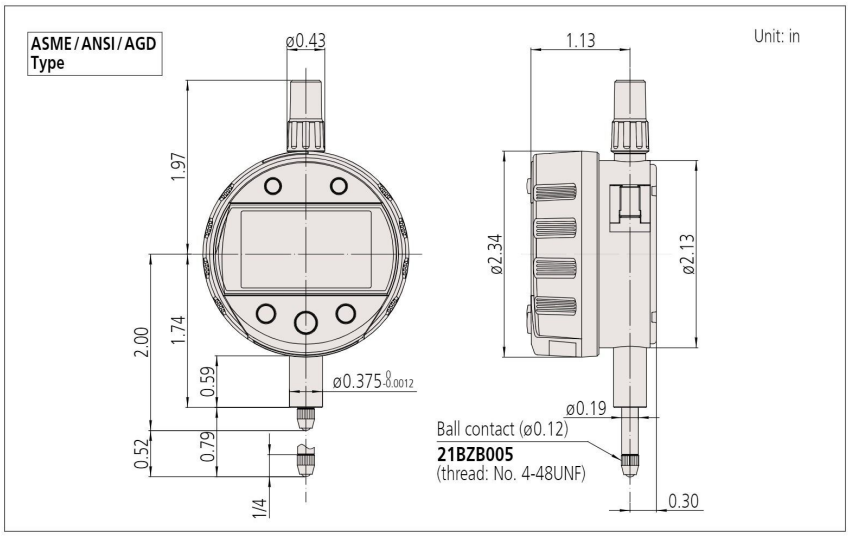

F

Mitutoyo reserves the right to change any or all aspects of any product specification, including prices, designs and service content, without notice.

MeasurLink® ENABLED
Data Management Software by Mitutoyo

ABSOLUTE™

PROPRIETARY INSPECTION CERTIFICATE

ABSOLUTE Digimatic Indicator ID-C SERIES 543 — Calculation Type

- Calculation function operates on spindle displacement.
  Entering the appropriate formula factors for a fixture dedicated to the application enables direct measurement readout, thereby eliminating any need for the conversion tables previously needed for those applications where fixtures are typically used.
- Five buttons, status icons, and clear button indications allow for easy operation of a wide variety of functions.
- Wide LCD and new analog bar graph are now standard on all models.
- The ABS (absolute) scale restores the last origin position* automatically when the indicator is turned on, and realizes high reliability by eliminating over-speed errors.
- By using the parameter setup kit (optional) and the dedicated software, the functions and the parameters can be configured using a computer.
- Equipped with a data output port that enables incorporation into measurement networking and statistical process control systems. (Refer to page A-3)

* Refer to "Origin Setting of Digimatic Indicators" on page F-25.

543-342B-10

Functions

- Calculation f (x') =Ax'+B+Cx'$^{-1}$
  (x'=x+offset)
- Peak detection (MAX/MIN)
- Runout (MAX - MIN) Hold

Note: Peak detection
1) Sampling rate: 10 readings/s
2) Capturing speed: 10 µm/s (max.)

Settings can be changed to:
1) Sampling rate: 50 readings/s
2) Capturing speed: 50 µm/s (max.)

- Zero-setting (INC system)
- Preset (ABS system)
- Tolerance judgment
  (3 pairs of ABS, INC memory function)
- Analog bar resolution selectable
- Key lock
- Display hold (when no external device is connected)
- Data output
- External PC setting input
- Display rotation (330°)
- Low battery voltage alarm display
- Error alarm display
- Resolution switching*

Resolution (mm)		
0.0002	0.005	0.1
0.0005	0.01	0.2
0.001	0.02	0.5
0.002	0.05	1

Resolution (in)		
0.00001	0.0002	0.005
0.00002	0.0005	0.01
0.00005	0.001	0.02
0.0001	0.002	0.05

* Since the calculation resolution is one micrometer (0.001 mm), using sub-micrometer resolution settings may result in the 4th-place digit being unreliable, particularly when B is set to a very low value and C=0. It does not change at all with certain combinations of calculation coefficient (for example, A=1, B=C=0). The 3rd-place digit representing micrometers (if displayed) is always reliable.

Optional Accessories

- Lifting
  Lifting lever **21EZA198**
  Lifting knob **21EZA105**
- SPC Cable:
  905338 (1 m)
  905409 (2 m)
- USB Input Tool Direct (2 m): **06AFM380F**
- Input Tool Series
  IT-020U (USB Keyboard Signal Conversion Type): **264-020**
  IT-007R (RS-232C Communication Conversion Type): **264-007**
- Connecting Cables for **U-WAVE-T** (160 mm): **02AZD790F**
  For foot switch: **02AZE140F**
- Digimatic Mini-Processor **DP-1VA LOGGER**: **264-505**
- Parameter setup kit: **21EZA313**

Note: Parameter setting software (can be downloaded for free from the Mitutoyo website) is also required.

SPECIFICATIONS

ISO/JIS type ASME/ANSI/AGD type

Metric

Order No.	Range (mm)	Resolution (selectable)	Maximum permissible error*1 (mm) MPE$_E$*2	Hysteresis MPE$_H$	Repeatability MPE$_R$	Measuring force MPL (N)	Power supply	Battery life (normal use)*4	Net mass (g)
543-340B-10	12.7	12 steps*4	0.003	0.002	0.002	1.5 or less	CR2032×1 pc.	Approx. 1 year	170
543-590B-10	25.4					1.8 or less*3			190
543-595B-10	50.8		0.006			2.3 or less*3			260

Inch/Metric

Order No.	Range	Resolution (selectable)	Maximum permissible error*1 MPE$_E$*2	Hysteresis MPE$_H$	Repeatability MPE$_R$	Measuring force MPL (N)	Power supply	Battery life (normal use)*4	Net mass (g)
543-341B-10	0.5 in /12.7 mm	12 steps*4	±0.0001 in /0.003 mm	0.0001 in /0.002 mm	0.0001 in /0.002 mm	1.5 or less	CR2032×1 pc.	Approx. 1 year	170
543-342B-10									
543-591B-10	1 in /25.4 mm					1.8 or less*3			190
543-592B-10									
543-596B-10	2 in /50.8 mm		±0.00025 in /0.006 mm			2.3 or less*3			260
543-597B-10									

*1 Valid for resolution set to 0.001 mm/0.00005 in and coefficients A=1, B=0 and C=0.
*2 Error of indication for the total measuring range
*3 Applies for a spindle orientation between the spindle pointing vertically downward to the spindle horizontal.
*4 Applies only if not connected to a data processor. Battery life depends on use of the indicator. Use the above value as a guide only.
Note: Flat-back type only.

F

Mitutoyo reserves the right to change any or all aspects of any product specification, including prices, designs and service content, without notice.

Mitutoyo

DIMENSIONS

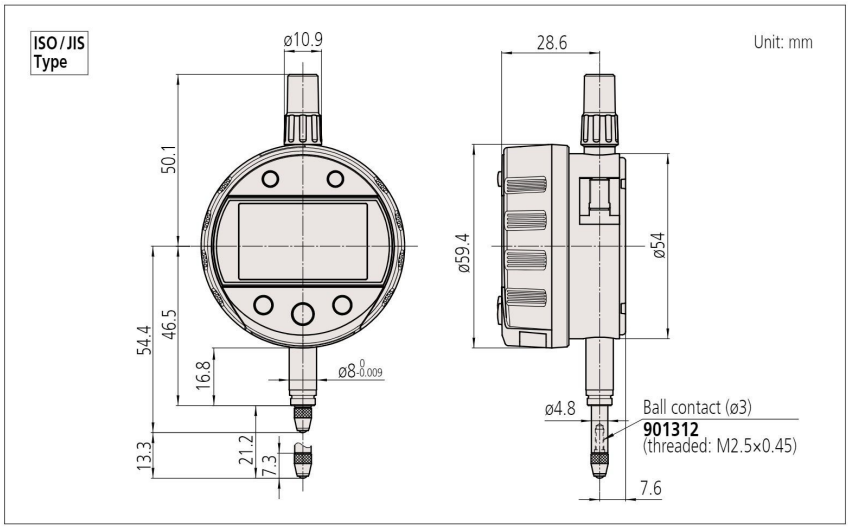

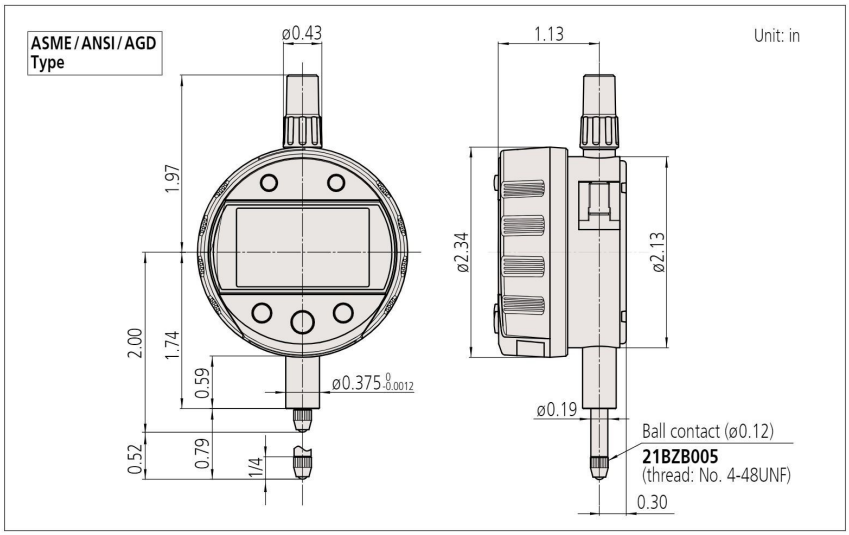

F

Mitutoyo reserves the right to change any or all aspects of any product specification, including prices, designs and service content, without notice.

Typical applications

Ball diameter

Outside diameter

Outside radius

Countersink diameter

Examples of measuring various features

Item		D=Countersink diameter/Groove width; H=Countersink depth/Groove depth				R=Outside radius of round object		R=Inside radius of round object	R=Outside radius of round object
Fixture type*1					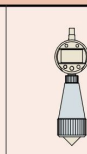	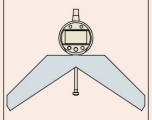	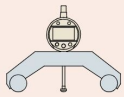		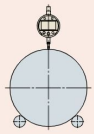
Contact point		Cone	Ball		Cone	—			
Measuring method x: Spindle displacement		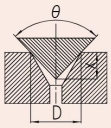	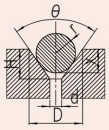		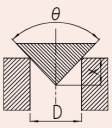	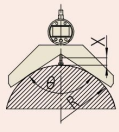	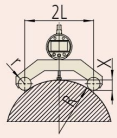	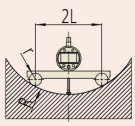	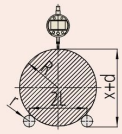
Calculation		D=Ax	D=Ax+B	H=Ax+B	D=Ax	R=Ax	R=Ax+B+Cx^{-1}		R=A(x+d)+B+C(x+d)$^{-1}$
Coefficient values	A	$-2\tan\frac{\theta}{2}$	$-2\tan\frac{\theta}{2}$	-1	$-2\tan\frac{\theta}{2}$	$-\frac{\sin\frac{\theta}{2}}{1-\sin\frac{\theta}{2}}$	$\frac{1}{2}$	$-\frac{1}{2}$	$\frac{1}{2}$
	B	0	$2r\left(\frac{1}{\cos\frac{\theta}{2}}-\tan\frac{\theta}{2}\right)$	$r\left(\frac{1}{\sin\frac{\theta}{2}}-1\right)-\frac{d}{2\tan\frac{\theta}{2}}$	0	0	$-r$	r	$-r$
	C	0	0	0	0	0	$\frac{L^2}{2}$	$-\frac{L^2}{2}$	$\frac{L^2}{2}$
Origin offset value (function ON/OFF)	d	0 (OFF)	0 (OFF)	0 (OFF)	0 (OFF)	0 (OFF)	0 (OFF)	0 (OFF)	d (ON)
ORIGIN-set position (x=0 position)		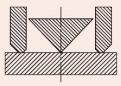			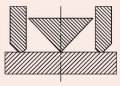	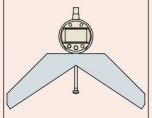	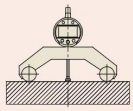		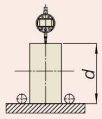
Displayed measurement value at ORIGIN-set position (Value displayed when x=0)		0	Value of coefficient B	0	0	0	Err 30*2 (Overflow error of Display value)		Depends on value of d

*1 A dedicated fixture for a workpiece can be made to order.
*2 The error is cleared when the measured value returns to the displayable range as a result of moving the spindle.

F

Mitutoyo reserves the right to change any or all aspects of any product specification, including prices, designs and service content, without notice.

Mitutoyo

ABSOLUTE Digimatic Indicator ID-C
SERIES 543 — Signal Output Function Type

- Enables GO/NG judgment to be output to external equipment for a measurement result against the peak values set. Solid-state switching provides high reliability by avoiding metallic switch contacts.
- The signal can be output to an external device such as a sequencer. The GO/NG judgment result is also indicated by the green/red LED and the signs on LCD.
- A peak-detection function makes runout measurements easy.
- The ABS (absolute) scale restores the last origin position* automatically when the indicator is turned on, and realizes high reliability by eliminating over-speed errors.
- Provided with a 4 m cable.
- External power supply required is 5-24 VDC/ 100 mA (max.).
- Dust-water protection level: IP54.

* Refer to "Origin Setting of Digimatic Indicators" on page F-25.

543-350-10

SPECIFICATIONS

ISO/JIS type ASME/ANSI/AGD type

Metric

Order No.	Range (mm)	Resolution (mm)	Maximum permissible error (mm) MPE$_E$*1	Hysteresis MPE$_H$	Repeatability MPE$_R$	Measuring force MPL (N)	Net mass (g)
543-350-10	12.7	0.001/0.01 (selectable)	0.003	0.002	0.002	2.5 or less	295
543-350B-10*2							285

Inch/Metric

Order No.	Range	Resolution	Maximum permissible error MPE$_E$*1	Hysteresis MPE$_H$	Repeatability MPE$_R$	Measuring force MPL (N)	Net mass (g)
543-351-10	0.5 in /12.7 mm	0.00005/0.0001/ 0.0005 in, 0.001/0.01 mm (selectable)	±0.00010 in /0.003 mm	0.0001 in /0.002 mm	0.0001 in /0.002 mm	2.5 or less	295
543-351B-10*2							285
543-352-10							295
543-352B-10*2							285

*1 Error of indication for the total measuring range
*2 Flat back
Note 1: LCD readout does not rotate.
Note 2: MAX/MIN holding: sample rate is 100 readings/s; max. rate of change of reading is 100 μm/s or less.
Note 3: Standard contact point: **901312** (ISO/JIS type), **21BZB005** (ANSI/AGD type)

ABSOLUTE™

IP54

Functions
- Signal output (–NG/OK/+NG, N-ch open drain, logical invert is available)
- Remote control (peak start preset/zero-set)
- Peak detection (MAX/MIN)
- Runout range measurement (MAX - MIN)
- Zero-setting (INC system)
- Presetting (ABS system)
- Measuring direction switching
- Tolerance judgment (3 pairs of ABS, INC memory function)
- Resolution switching
- Simple calculation: f(x) =Ax
- Key lock
- Calibration mode (Signal output in Digimatic code format)
- Error alarm display

Optional Accessories
- Lifting*1
  Lifting lever **21EZA198**
  Lifting knob **21EZA105**
- Digimatic power supply unit: **21EZA345**
  To denote your AC power cable add the following suffixes to the order No.: **A** for UL/CSA, **D** for CEE, **DC** for CCC, **E** for KC. **No suffix** is required for JIS/100VAC.
  Used in the calibration mode when executing automatic inspection using i-Checker **IC2000**.
  In such a case, purchase connecting cable **21EAA194** (1 m), or **21EAA190** (2 m).

Note: It can't be used as a power suppy when using in the normal mode.
- Contact points for Mitutoyo's digimatic indicators.*2
- Interchangeable backs for SERIES 2 models (Refer to page F-61 for details.)

*1 Dust-water protection is not guaranteed.
*2 Refer to pages F-57 to F-60 for details.

Output signals and LCD display

Wire	– NG	OK	+ NG	ABS data composition error
Orange (– NG)	Low	High	High	High
Green (OK)	High	Low	High	High
Brown (+ NG)	High	High	Low	High
LED	Red	Green	Red	Red flashing
LCD	◀	○	▶	"x.xxE" indication

Note: Logical invert is available.

I/O Specifications

Wire	Signal	I/O	Description
Black	– V (GND)	—	Connected to minus (-) terminal
Red	+ V	—	Power supply (5 to 24 VDC)
Orange	– NG	O	Tolerance judgment result output: Only the terminal corresponding to a judgment result is set to the low level.
Green	OK	O	
Brown	+ NG	O	
Yellow	PRESET_RECALL ZERO	I	External input terminal: If the relevant terminal is set to the low level, its signal becomes true.
Blue	PEAK_START	I	
Shield	FG	—	Connected to GND (Earth)

Note: Measurement data cannot be output.

Output

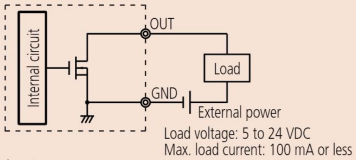

Load voltage: 5 to 24 VDC
Max. load current: 100 mA or less

Input

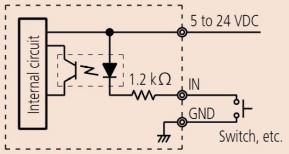

Input current: Max. 20 mA

Mitutoyo reserves the right to change any or all aspects of any product specification, including prices, designs and service content, without notice.

DIMENSIONS

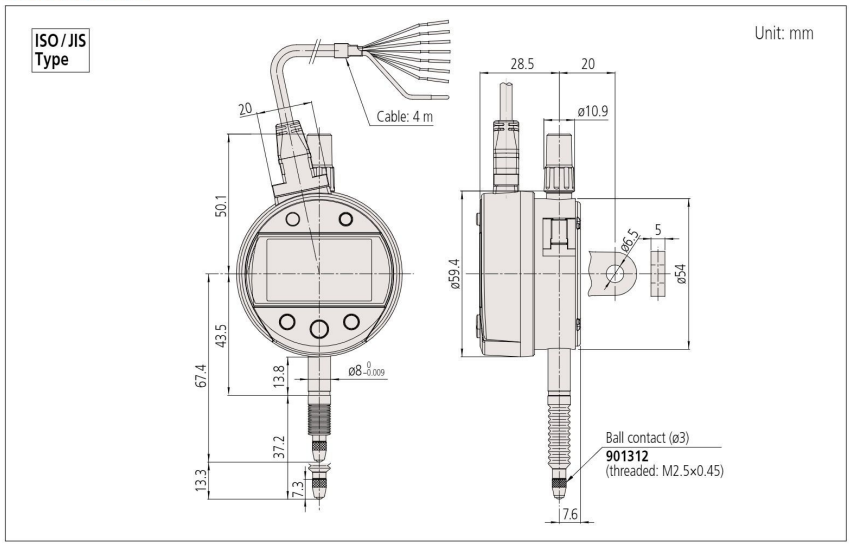

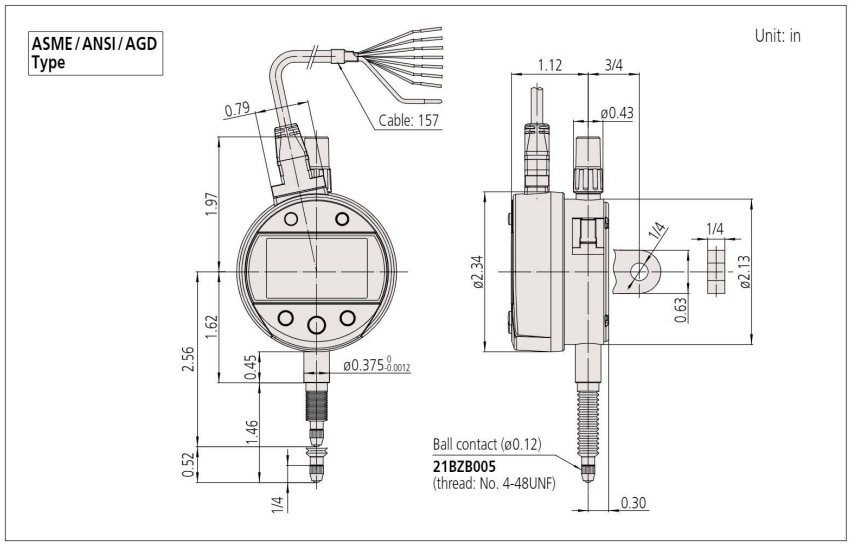

F

MeasurLink® ENABLED
Data Management Software by Mitutoyo

ABSOLUTE™

ABSOLUTE Digimatic Indicator ID-U
SERIES 575 — Slim and Economical Design

- General-purpose slim indicator with a measuring range of 25.4 mm and a resolution of 0.01 mm.
- Cost-effective and user-friendly type with basic functions.
- The ABS (absolute) scale restores the last origin position* automatically when the indicator is turned on, and realizes high reliability by eliminating over-speed errors.
- Battery life: approx. 20,000 hours in continuous use.
- Easy-to-read large LCD readout with a character height of 8 mm.
- Equipped with a data output port that enables incorporation into measurement networking and statistical process control systems. (Refer to page A-3)

* Refer to "Origin Setting of Digimatic Indicators" on page F-25.

575-121

Technical Data

- Display: 5-digit LCD, sign
- Battery: SR44 (1 pc.), **938882** for initial operational checks (standard accessory)
- Battery life: Approx. 20,000 hours of continuous use. Approx. 5 years under normal use.

Note: It varies depending on use frequency and method. Please take the values as rough indications.

- Lifting lever: **21EAA426** (standard accessory)

Function

- Origin set (Zero-setting)
- Measuring direction switching
- Data output
- Low battery voltage alarm display
- Error alarm display

Optional Accessories

- Spindle lifting cable (stroke: 10 mm): **21JZA295**
- Contact points for Mitutoyo's digimatic indicators (Refer to pages F-57 to F-60 for details.)
- SPC Cable:
  905338 (1 m)
  905409 (2 m)
- USB Input Tool Direct (2 m): **06AFM380F**

Note: Please separately purchase **USB-ITPAK** since there is no data output switch on the measurement instrument.

- Input Tool Series
  IT-020U (USB Keyboard Signal Conversion Type): **264-020**
  IT-007R (RS-232C Communication Conversion Type): **264-007**
- Connecting Cables for **U-WAVE-T** (160 mm): **02AZD790F**
  For foot switch: **02AZE140F**
- Digimatic Mini-Processor **DP-1VA LOGGER**: **264-505**
- Measuring stands
  (Refer to pages F-84 to F-91 for details.)

SPECIFICATIONS

ISO/JIS type ASME/ANSI/AGD type

Metric

Order No.	Range (mm)	Resolution (mm)	Maximum permissible error (mm)			Measuring force MPL (N)
			MPE_E*	Hysteresis MPE_H	Repeatability MPE_R	
575-121	25.4	0.01	0.02	0.02	0.01	1.8 or less

Inch/Metric

Order No.	Range	Resolution	Maximum permissible error			Measuring force MPL (N)
			MPE_E*	Hysteresis MPE_H	Repeatability MPE_R	
575-122	1 in/ 25.4 mm	0.0005 in/ 0.01 mm	±0.001 in/0.02 mm	0.001 in/ 0.02 mm	0.0005 in/ 0.01 mm	1.8 or less
575-123						

* Error of indication for the total measuring range

F

Mitutoyo reserves the right to change any or all aspects of any product specification, including prices, designs and service content, without notice.

DIMENSIONS

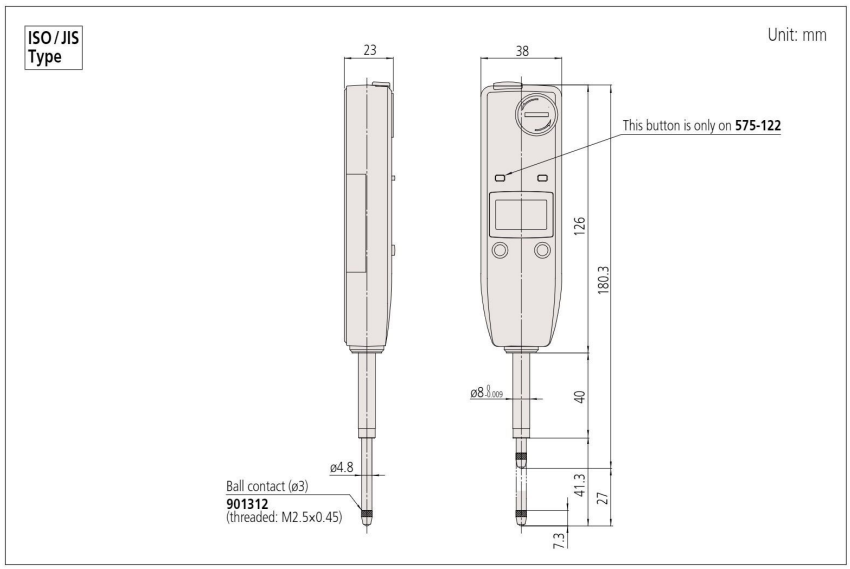

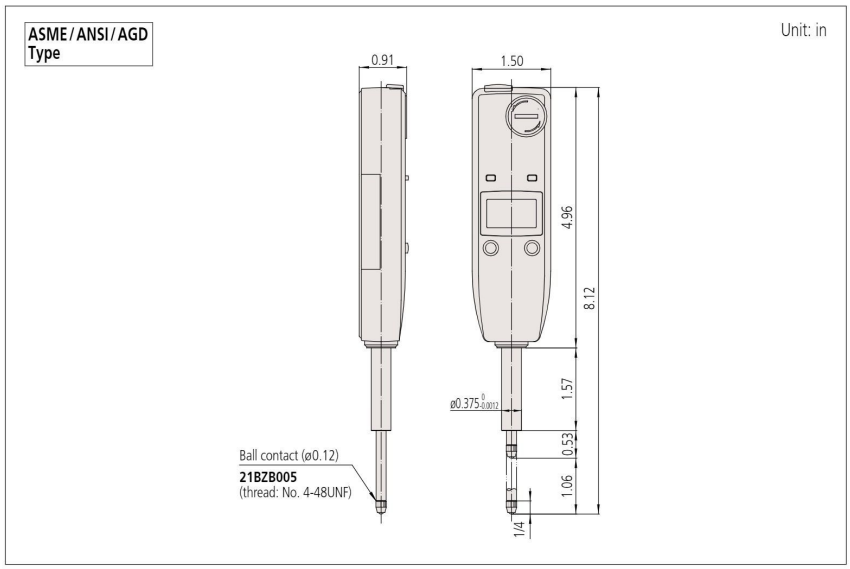

F

MeasurLink® ENABLED
Data Management Software by Mitutoyo

Digimatic Indicator ID-H
SERIES 543 — High Accuracy and High Functionality Type

- A top-level digital indicator that supports high accuracy and multi-functional measurement.
- Take advantage of its high accuracy backed up by 0.0005 mm/0.00002 inch inch resolution, remote control functionality via a handheld controller (or an RS-232C interface) and easy runout measurements with the well-established analog bar display.
- Functionality meets the needs of diverse measurement applications.

Tolerance judgment

OK | NG | Analog bar display | Resolution switching

- Measuring maximum value, minimum value and runout (MAX - MIN)

Maximum value/minimum value measurement | Difference/runout measurement

Example: Indicator traces between points <A> to <D>
Difference (or Total Runout) is displayed as <A>. Dimensions <B> (maximum value) and <C> (minimum value) can be retrieved from memory with a simple key sequence or using the remote control (optional).

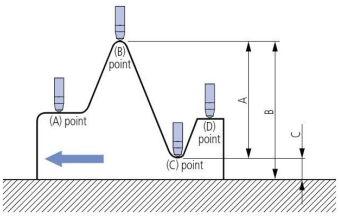

- With the optional remote controller, operations such as zero-setting and presetting can be made without touching the indicator body, thereby avoiding disturbance to the set-up.
- An advanced, remote control system can be implemented with the built-in RS-232C interface and a PC.
- Equipped with a data output port that enables incorporation into measurement networking and statistical process control systems. (Refer to page A-3)

Remote controller (optional)

543-561 543-563

Technical Data

- Display: 7-digit LCD, sign, and analog bar with 2-color backlight
- Power supply: 5.9 V DC (via AC adapter) **06AGZ369***

* To denote your AC power cable add the following suffixes to the order No.: **JA** for UL/CSA and PSE, **D** for CEE, **DC** for CCC, **E** for BS, **K** for KC, **No suffix** is required for JIS/100 V

- Positional detection method: Photoelectric-type reflection linear encoder
- Maximum response speed: 1000 mm/s
- Lifting lever: **21EAA426** (standard accessory)

Optional Accessories

- Remote controller: **21EZA099**
- Lifting
  Lifting cable: **21JZA295** (stroke 30 mm)
  Lifting knob: **21EZA101**
- SPC Cable:
  936937 (1 m)
  965014 (2 m)
- USB Input Tool Direct (2 m): **06AFM380D**
- Input Tool Series
  IT-020U (USB Keyboard Signal Conversion Type): **264-020**
  IT-007R (RS-232C Communication Conversion Type): **264-007**
- Connecting Cables for **U-WAVE-T** (160 mm): **02AZD790D**
  For foot switch: **02AZE140D**
- RS-232C Connecting cable (2 m): **21EAA131**
- Lug-on-center back:
  101040 (ISO/JIS type)
  101306 (ASME/ANSI/AGD type)
- Contact points for Mitutoyo's digimatic indicators (Refer to pages F-57 to F-60 for details.)
- Digimatic Mini-Processor **DP-1VA LOGGER**: **264-505**
- Granite comparator stands (Refer to page F-88 for details.)
- Comparator stands (Refer to page F-90 for details.)

Comparator stand
215-505-10

Remote controller | Lifting cable

F

Mitutoyo reserves the right to change any or all aspects of any product specification, including prices, designs and service content, without notice.

SPECIFICATIONS

Metric

Order No.*1	Range (mm)	Resolution (mm)	Maximum permissible error (mm)			Measuring force MPL (N)	Net mass (g)
			MPE_E*2	Hysteresis MPE_H	Repeatability MPE_R		
543-561	30.4	0.0005/ 0.001 (selectable)	0.0015	0.0015	0.001	2.0 or less	290
543-563	60.9		0.0025	0.0025		2.5 or less	305

Inch/Metric

ISO/JIS type ASME/ANSI/AGD type

Order No.*1	Range	Resolution	Maximum permissible error			Measuring force MPL (N)	Net mass (g)
			MPE_E*2	Hysteresis MPE_H	Repeatability MPE_R		
543-562	1.2 in /30.4 mm	0.00002/ 0.00005/ 0.0001 in, 0.0005/ 0.001 mm (selectable)	±0.00006 in/ 0.0015 mm	0.00006 in/ 0.0015 mm	0.00004 in/ 0.001 mm	2.0 or less	300
543-564	2.4 in /60.9 mm		±0.0001 in/ 0.0025 mm	0.0001 in/ 0.0025 mm		2.5 or less	

*1 To denote your AC power cable add the following suffixes to the order No.: **A** for UL/CSA, **D** for CEE, **DC** for CCC, **E** for BS, **K** for KC, **No suffix** is required for JIS/100 V

*2 Error of indication for the total measuring range

Note 1: The indicator can output SPC (Digimatic) data consisting of up to 6 digits in full. If the data consists of 7 digits the first digit is not output (example: 123.4565 mm is output as 23.4565 mm).

Note 2: Regarding origin setting, refer to "Origin Setting of Digimatic Indicators" on page F-25.

Note 3: The orientation for use can be from vertical (contact point pointing downward) to horizontal (spindle in horizontal orientation).

DIMENSIONS

ISO/JIS Type

Unit: mm

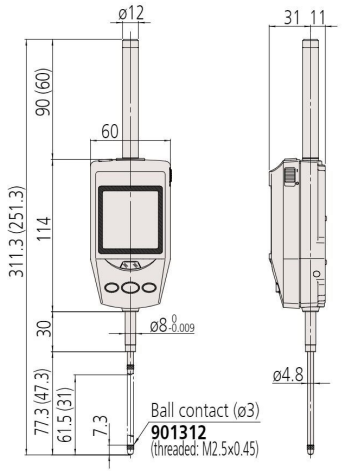

Note: ( ) = **543-561**

ASME/ANSI/AGD Type

Unit: in

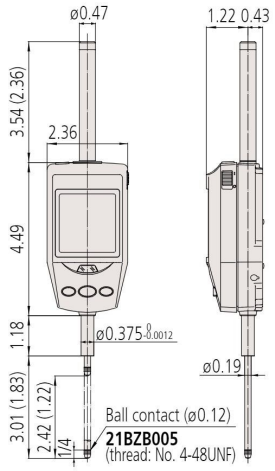

Note: ( ) = **543-562**

F

MeasurLink® ENABLED
Data Management Software by Mitutoyo

ABSOLUTE™

PROPRIETARY INSPECTION CERTIFICATE

High-performance ABS Digimatic Indicator ID-F SERIES 543 — with Back-lit LCD Screen

- Supports bidirectional communication between the **ID-F** and the computer, enabling data output to a computer and setting of various functions of **ID-F** from a computer.
- The face can be rotated 330° to maintain the ease of use and readability of the characters and the bar even when the **ID-F** is used horizontally or at an angle.

- GO/±NG judgment function: If a judgment result shows an out of tolerance condition, the display backlighting changes from green to red.

Green indication for GO judgment

Red indication for ±NG judgment

- An analog bar indicator has been integrated to make upper/lower limit and turnover point reading more comfortable.
- The ABS (absolute) scale restores the last origin position* automatically when the indicator is turned on, and realizes high reliability by eliminating over-speed errors.
- Easy-to-read large LCD readout with the height of the characters has been increased from 8.5 mm with the previous model to 11 mm (about 1.5 times as much).
- External power supply type: an AC adapter is a standard accessory. Does not require battery replacement.
- The maximum resolution is 0.5 µm (0.0005 mm). With a indication error corresponding to 0.0025 mm, this indicator can be used in high-precision applications.
- Equipped with a data output port that enables incorporation into measurement networking and statistical process control systems. (Refer to page A-3)

* Refer to "Origin Setting of Digimatic Indicators" on page F-25.

Technical Data

- Display: 7-digit LCD, sign, and analog bar with 2-color backlight
- Power supply: 5.9 V (via AC adapter) **06AGZ369***
- * To denote your AC power cable add the following suffixes to the order No.: **JA** for UL/CSA and PSE, **D** for CEE, **DC** for CCC, **E** for BS, **K** for KC
- Lifting lever: **21EAA426** (standard accessory)

Functions

- Peak detection (MAX/MIN)
- Runout range measurement (MAX - MIN)
- Zero-setting (INC system)
- Presetting (ABS system)
- Measuring direction switching
- Tolerance judgment
- Resolution switching
- Simple calculation f(x) =Ax
- Analog resolution selection
- Data hold (when not connected to an external device)
- Function Lock
- Calibration schedule warning
- Data output
- Display rotation (330°)
- Error alarm display

Optional Accessories

- Lifting knob:
  21EZA197 (25.4 mm/1 inch type)
  21EZA200 (50.8 mm/2 inch type)
- Auxiliary spindle spring:
  02ACA571 (25.4 mm/1 inch type)
  02ACA773 (50.8 mm/2 inch type)
- SPC cable:
  06AGL011 (1 m)
  06AGL021 (2 m)
- USB Input Tool Direct (2 m): **06AGQ001F**
- Measurement data collection software
  USB-ITPAK V3.0: **06AGR543**
- Input Tool Series
  IT-020U (USB Keyboard Signal Conversion Type): **264-020**
  IT-007R (RS-232C Communication Conversion Type): **264-007**
- Connecting Cables for **U-WAVE-T** (160 mm): **02AZG011**
  For foot switch: **02AZG021**
- Contact points for Mitutoyo's digimatic indicators*1
- Interchangeable backs for SERIES 2 models*2
- Digimatic Mini-Processor **DP-1VA LOGGER**: **264-505**
- Measuring stands*3

*1 Refer to pages F-57 to F-60 for details.
*2 Refer to page F-61 for details.
*3 Refer to pages F-84 to F-91 for details.

SPECIFICATIONS

Metric

Order No.	Range (mm)	Resolution (mm)	Resolution switching (mm)	Maximum permissible error MPE (mm)			Response speed	Measuring force MPL (N)	Power supply	Net mass (g)
				MPE_E*	Hysteresis MPE_H	Repeatability MPE_R				
543-851	25.4	0.0005	0.0005/ 0.001/ 0.01	0.0025	0.002	0.002	Unlimited	1.8 or less	AC adapter (5.9 V)	240
543-853	50.8			0.004				2.3 or less		330
543-857	50.8			0.003						

Inch/Metric

ISO/JIS type ASME/ANSI/AGD type

Order No.	Range	Resolution	Resolution switching	Maximum permissible error MPE			Response speed	Measuring force MPL (N)	Power supply	Net mass (g)
				MPE_E*	Hysteresis MPE_H	Repeatability MPE_R				
543-852	1 in/ 25.4 mm	0.00002 in/ 0.0005 mm	0.00002/ 0.00005/ 0.0001/ 0.0005/ 0.001 in 0.005/ 0.001/ 0.01 mm	±0.0001 in/ 0.0025 mm	0.00008 in/ 0.002 mm	0.00008 in/ 0.002 mm	Unlimited	1.8 or less	AC adapter (5.9 V)	240
543-854	2 in/ 50.8 mm			±0.00016 in/ 0.004 mm				2.3 or less		330
543-858	2 in/ 50.8 mm			±0.00012 in/ 0.003 mm						

* Error of indication for the total measuring range (MPE_E)
Note: Measures precisely Max., Min., and TIR (amplitude (Max - Min) values. (Peak detection speed: 500 times/s)

F

Mitutoyo reserves the right to change any or all aspects of any product specification, including prices, designs and service content, without notice.

DIMENSIONS

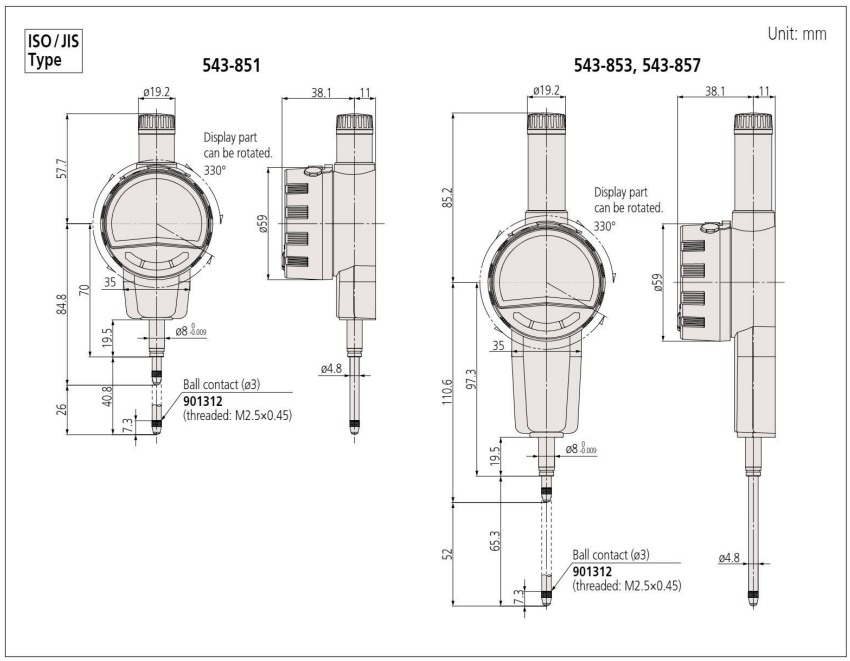

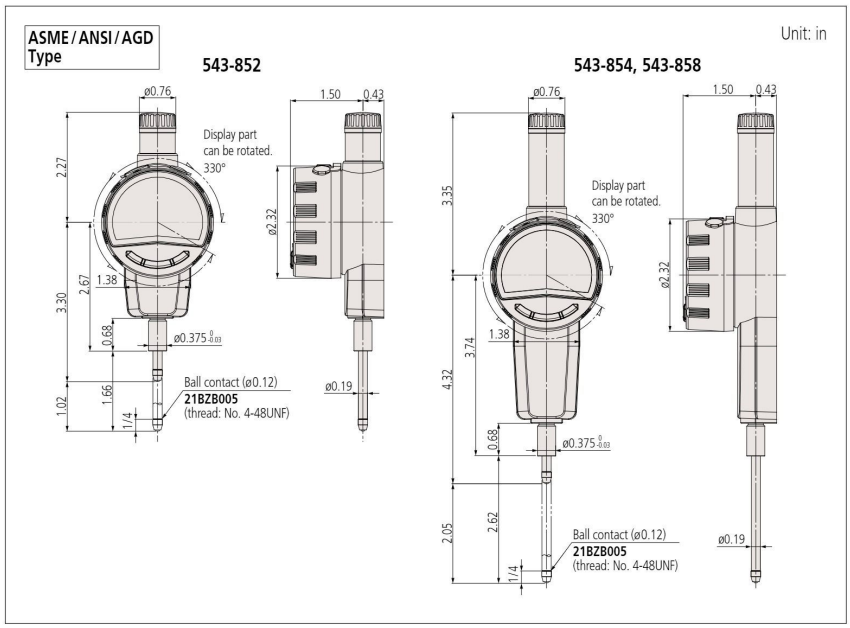

F

Supplemental information on Digimatic Indicators

Origin setting of Digimatic Indicators

Repeatability in the range of 0.2 mm from the lowest rest point is not guaranteed for Digimatic indicators. When setting the origin or presetting a specific value, be sure to lift the spindle at least 0.2 mm from the lowest rest point.

EC Counter
SERIES 542 — Low-cost, Modular Type Display Unit

- –NG, OK and +NG tolerance judgment results can be displayed.
- Can be set to produce either tolerance judgment output or Digimatic output.
- Small size (96×48 mm) which conforms to DIN standards.

542-007

MeasurLink® ENABLED
Data Management Software by Mitutoyo

Functions
- Preset
- Tolerance judgment (3 steps)

SPECIFICATIONS

Order No.		542-007*
Resolution ( ) indicates maximum display range		0.01 mm (±9999.99)/0.0005 in (±99.9995 in)/0.001 in (±999.999 in) 0.001 mm (±9999.999)/0.00005 in (±9.99995 in)/0.0001 in (±99.999 in) [automatic setting by gage]
Tolerance judgment display		LED display (3 steps: Amber, Green, Red)
External output (switching type)	Tolerance judgment output	–NG, OK, +NG (open-collector)
	Data output	Digimatic output
Control input		External PRESET, external HOLD
Operation temperature range		0 to 40 °C (RH 20 to 80%, no condensation)
Storage temperature range		–10 to 50 °C (RH 20 to 80%, no condensation)
External dimensions		96 (W) ×48 (H) ×84.6 (D) mm
Power Supply		AC adapter: **12BAR954** AC cable: **12BAK729** (Japan), **12BAK730** (U.S.), **12BAK731** (EU), **12BAK734** (UK), **12BAK732** (China), **12BAK733** (Korea)
Standard Accessories		AC adapter, AC cable, rubber feet
Mass		220 g

* To denote your AC power cable add the following suffixes to the order No.: **A** for UL/CSA, **D** for CEE, **DC** for CCC, **E** for BS, **K** for KC, C and **No suffix** are required for PSE.

DIMENSIONS

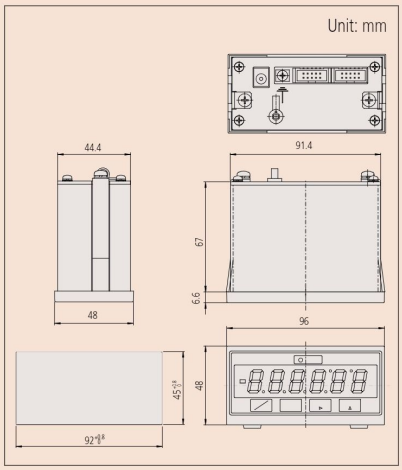

F

Mitutoyo reserves the right to change any or all aspects of any product specification, including prices, designs and service content, without notice.

Feature icons

Icon	Feature description
	Continuous scale
	Balanced scale
	Reverse reading type, Suitable for depth and step measurement.
	One revolution type for easy and error-free reading
	Double scale spacing type, easy-on-the-eyes
	Shockproof
	Waterproof (IP63)
	Waterproof (IP64)
	With damper at top rest point
	With damper at lowest rest point
	Jeweled bearing
	Peak retaining
	Dustproof
	With coaxial revolution counter
	Back Plunger
	Adjustable hand

Note: Mitutoyo produces ASME-compatible products.
Contact us for details.

Dial Indicators

Mitutoyo's dial indicators have long been used by many of our customers. In full recognition of their needs, we have devoted ourselves to the research and development necessary to produce high-quality and high-accuracy dial indicators. Due to the recent re-acknowledgement of the importance of measurement technologies, the demands on dial indicators are many and varied: installation in measuring jigs, mounting in countless types of precision equipment, etc. We offer numerous models with various types of dial faces, measuring ranges, graduation styles and environmental resistance ratings. The stems, which ensure the fixture reliability, and the spindles, which are the basis of accuracy, have excellent resistance against harsh use thanks to the hardened stainless steel construction. 0.01 mm resolution dial indicators have a main gear made of stainless steel with high resistance to wear and deformation. 0.001 mm graduation dial indicators employ a sector gear made of a special alloy in order to further increase the resistance to wear. Many models employ an O-ring to ensure airtightness between the outer frame and the bezel in order to prevent water or oil penetration from the front.
Mitutoyo's dial indicators are manufactured and inspected according to JIS B 7503:2017. (Inspection orientation: vertical)
Important factors in choosing a dial indicator: the size (bezel diameter), resolution (graduation) and measuring range. Use the table on the right to help choose a suitable model for your application.

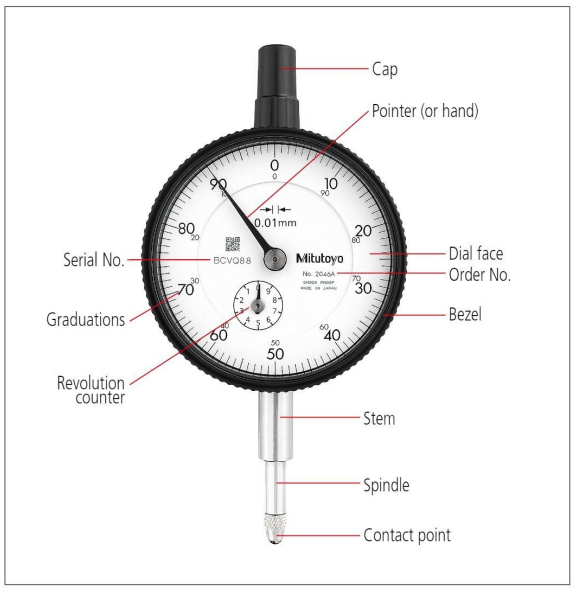

Parts of a dial indicator

F